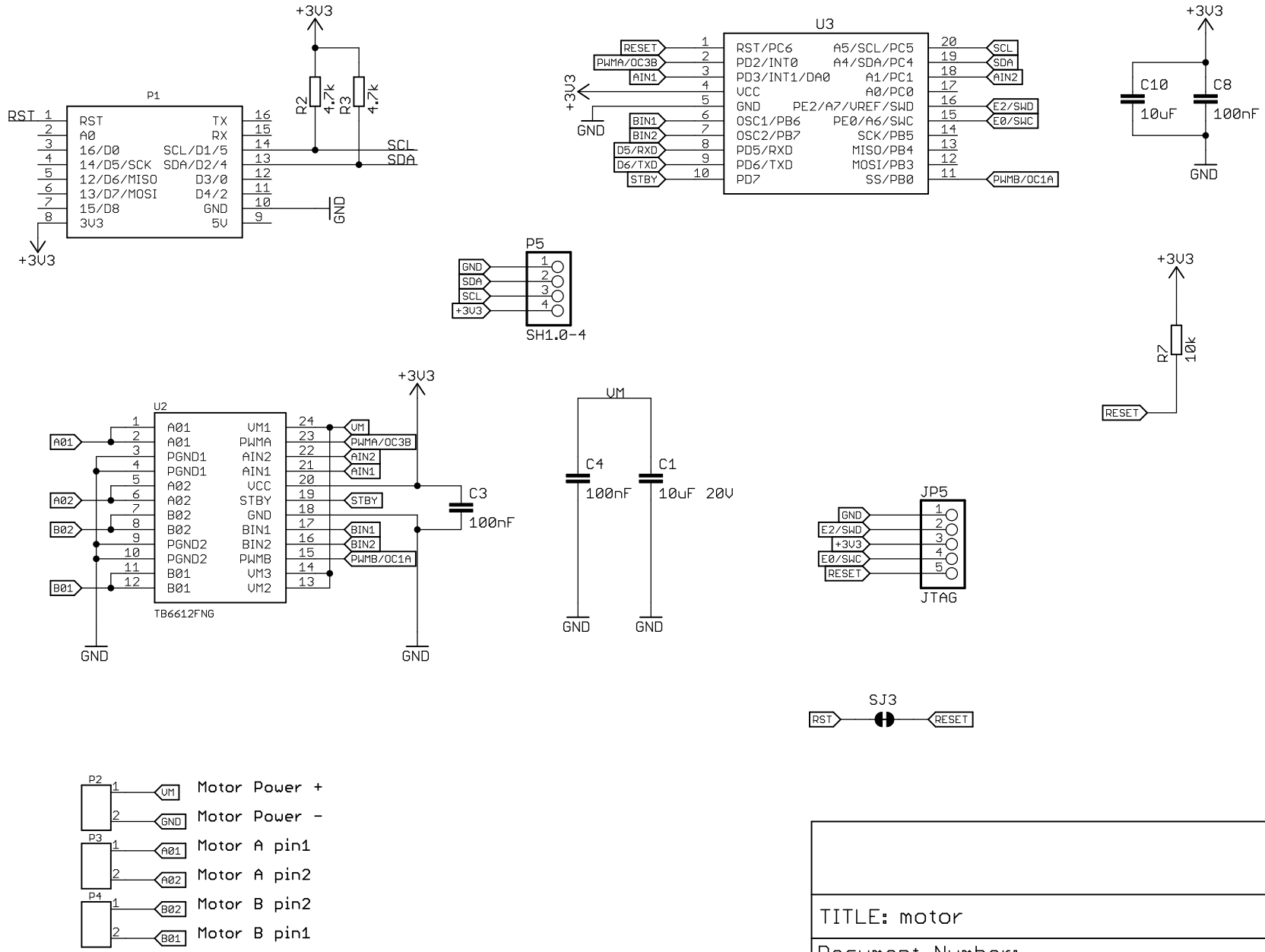
P1
RST
A0
16/D0
14/D5/SCK
12/D6/MISO
13/D7/MOSI
15/D8
3V3
TX
RX
SCL/D1/5
SDA/D2/4
D3/0
D4/2
GND
5V
+3V3
R2 4.7k
R3 4.7k
SCL
SDA
GND
U3
RST/PC6
PD2/INT0
PD3/INT1/DA0
VCC
GND
OSC1/PB6
OSC2/PB7
PD5/RXD
PD6/TXD
PD7
A5/SCL/PC5
A4/SDA/PC4
A1/PC1
A0/PC0
PE2/A7/VREF/SWD
PE0/A6/SWC
SCK/PB5
MISO/PB4
MOSI/PB3
SS/PB0
RESET
PWMA/OC3B
AIN1
BIN1
BIN2
D5/RXD
D6/TXD
STBY
AIN2
E2/SWD
E0/SWC
PWMB/OC1A
C10 10uF
C8 100nF
P5
SH1.0-4
R7 10k
U2
TB6612FNG
A01
A02
B02
B01
VM1
PWMA
AIN2
AIN1
VCC
STBY
GND
BIN1
BIN2
PWMB
VM3
VM2
PGND1
PGND2
C3 100nF
VM
C4 100nF
C1 10uF 20V
JP5
JTAG
SJ3
P2
P3
P4
Motor Power +
Motor Power -
Motor A pin1
Motor A pin2
Motor B pin2
Motor B pin1
LOLIN
TITLE: motor
Document Number:
REV: 2.0.0
Date: ?????
Sheet: 1/1